© DEN HARTOG INDUSTRIES, INC.

Copyright. All information furnished within this document, electronic file or design correspondence is the property of Den Hartog Industries, Inc. and shall not be used, disclosed to others or copied without the expressed written consent of Den Hartog Industries, Inc.

DWG NO. 2448-12	SH	D

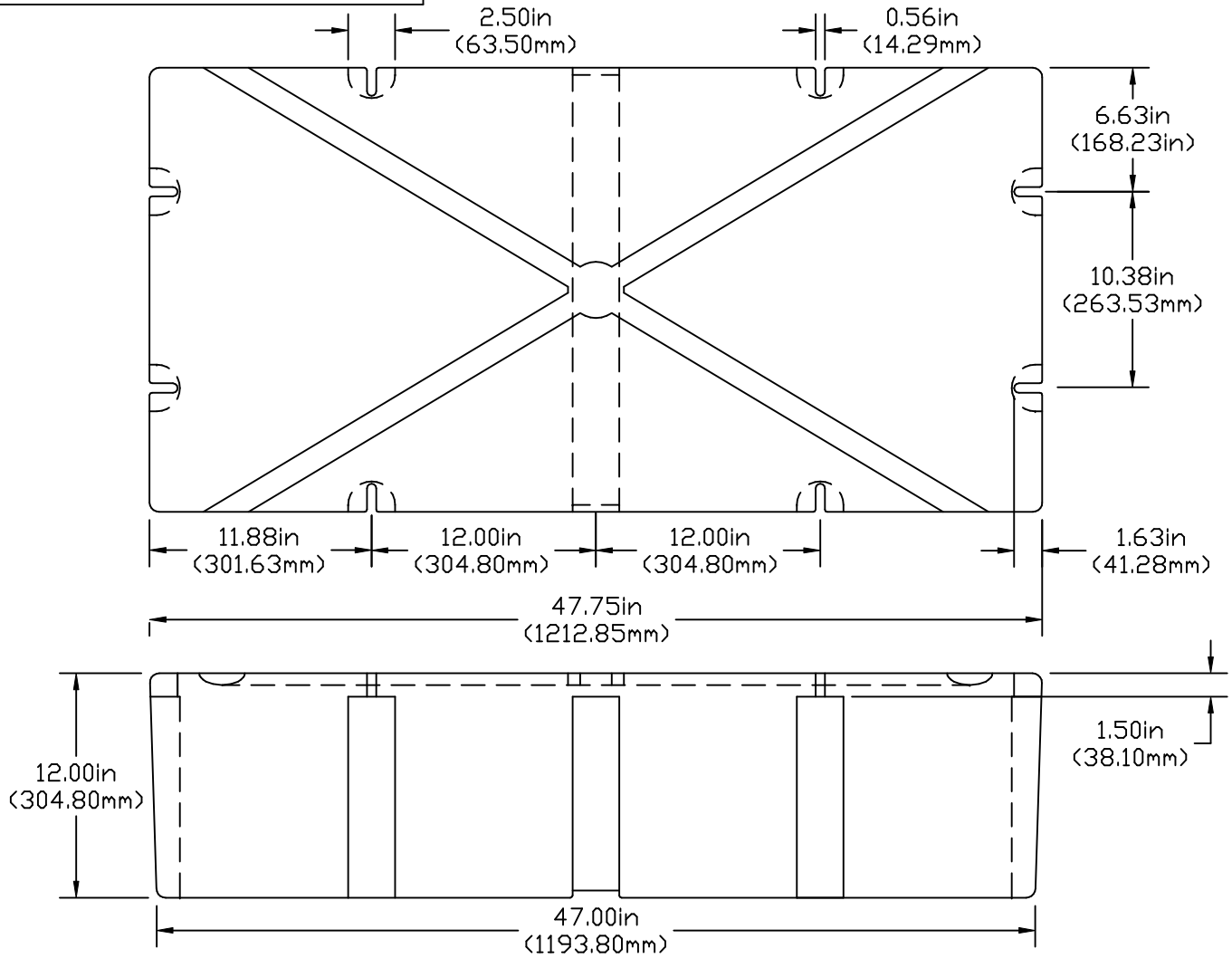

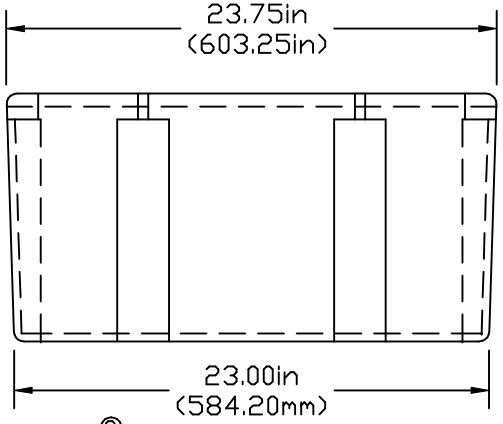

©

NOTE: BUOYANCY IS 433 LBS.(196.41 KG.)

REV	DESCRIPTION	DATE	APVD
D	METRIC DIMENSIONS ADDED CCN 1685	6-25-08	ADH
C	ADD BUOYANCY NOTE	1-8-07	GWC
C	CHANGE WEIGHTS AF WAS 22 LBS FF WAS 36 LBS	1-8-07	GWC
B	CHANGED NOM. WALL	12-20-98	
A	CHANGE WEIGHTS	11-16-94	

Ⓑ

DRAWN	DATE
DEAN	2-24-94
APPROVED ADH	DATE 11/5/07

MATERIAL

POLYETHYLENE
0.150in(3.81mm) NOM. WALL

ACE ROTO-MOLD

PART NO. 2448-12

SCALE NONE

UOS DIMENSIONS ARE IN INCHES
GENERAL TOLERANCES
±1% @ 68F° (20C°)

THIRD ANGLE PROJECTION

PART WEIGHT ©

AF 23 LBS.(10.43 KG.)
FF 31 LBS.(14.06 KG.)

SIZE		REV
A	2448-12	D