© DEN HARTOG INDUSTRIES, INC.

Copyright. All information furnished within this document, electronic file or design correspondence is the property of Den Hartog industries, Inc. and shall not be used, disclosed to others or copied without the expressed written consent of Den Hartog Industries, Inc.

ST0035-32

A

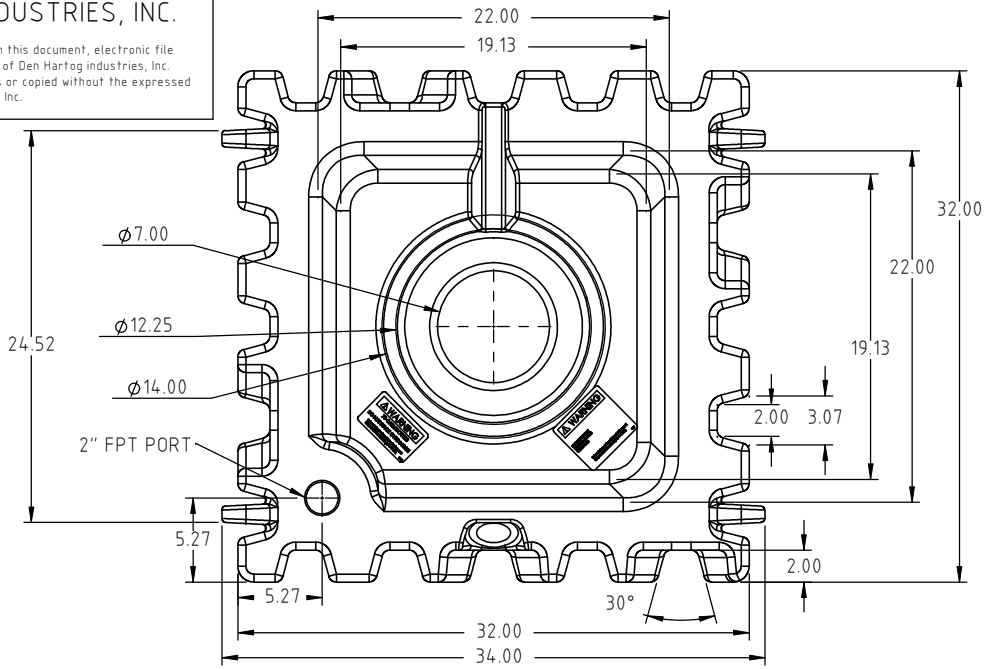

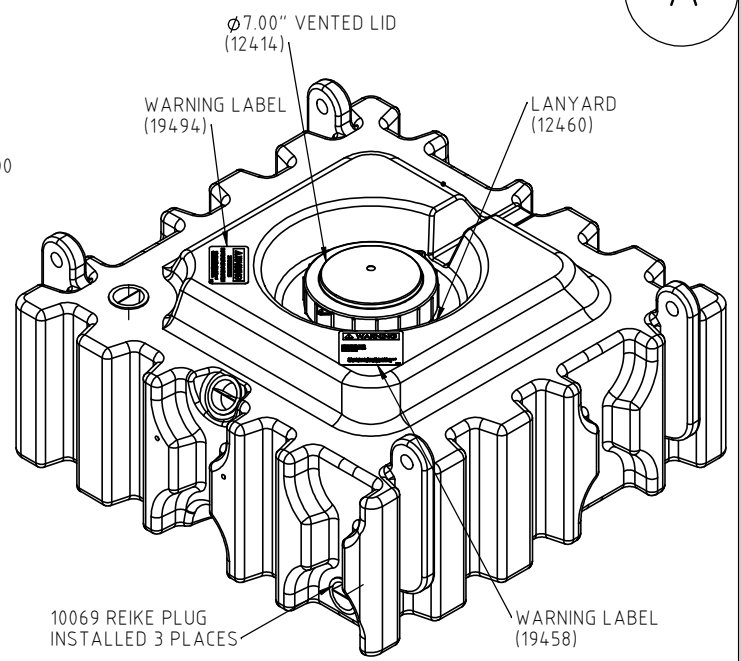

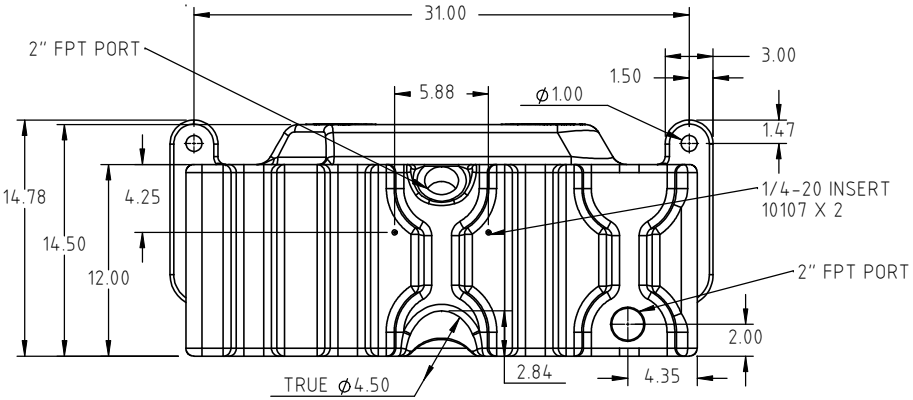

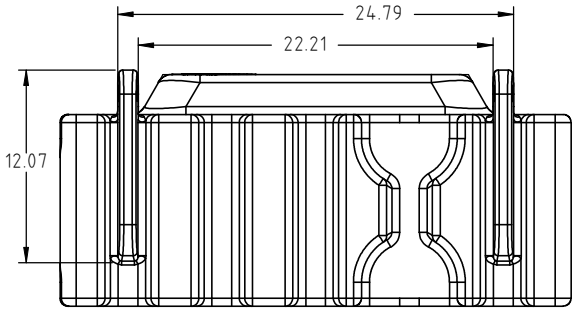

REV	DESCRIPTION	BY / DATE	CCN
A	10420 WAS 10539	ADH 9/20/10	2086

DRAWN / DATE: ADH 3/3/10

APPRD. / DATE: REH 7/23/10

MATERIAL (A): 10420

ALL DIMENSIONS ARE IN DECIMAL INCHES
TOLERANCES UNLESS OTHERWISE SPECIFIED

POLYETHYLENE: ±1% @ 68° F

METAL: DECIMAL ± .125" FRACTION ± 1/4" ANGLE ± 1°

THIRD ANGLE PROJECTION ANSI 14.5M

SHOT WEIGHT: 28 lb.

SHIPPING WEIGHT: 30 lb.

FINISH:

NOTES:

1.) NOM. WALL THICKNESS = 0.180

Den Hartog INDUSTRIES, INC.

Ace Roto-Mold Injection Molding Blow Molding Sowjoy

4010 HOSPERS DRIVE S. BOX 425, HOSPERS, IOWA 51238-0425

DESCRIPTION: 35 GALLON TOTE

SCALE: N.S.

PART NO.: ST0035-32