© DEN HARTOG INDUSTRIES, INC.

Copyright. All information furnished within this document, electronic file or design correspondence is the property of Den Hartog industries, Inc. and shall not be used, disclosed to others or copied without the expressed written consent of Den Hartog Industries, Inc.

ST0180-42

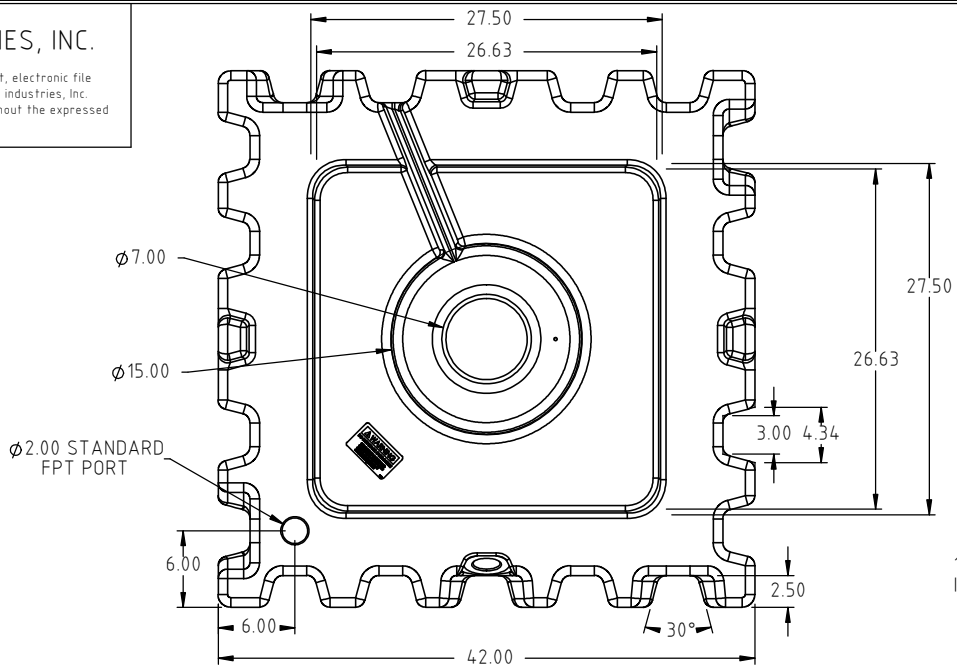

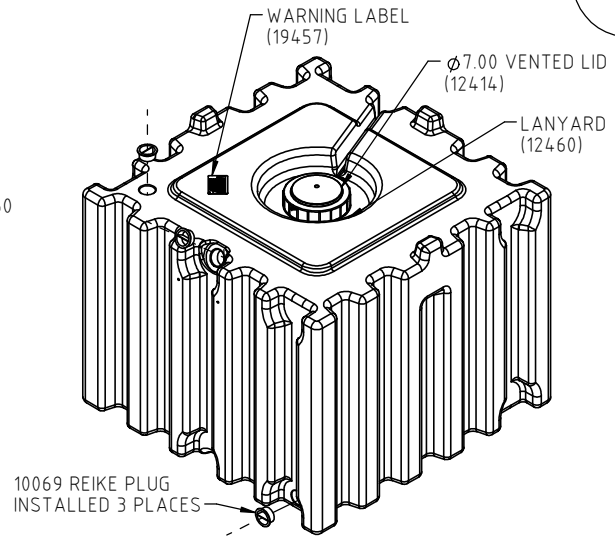

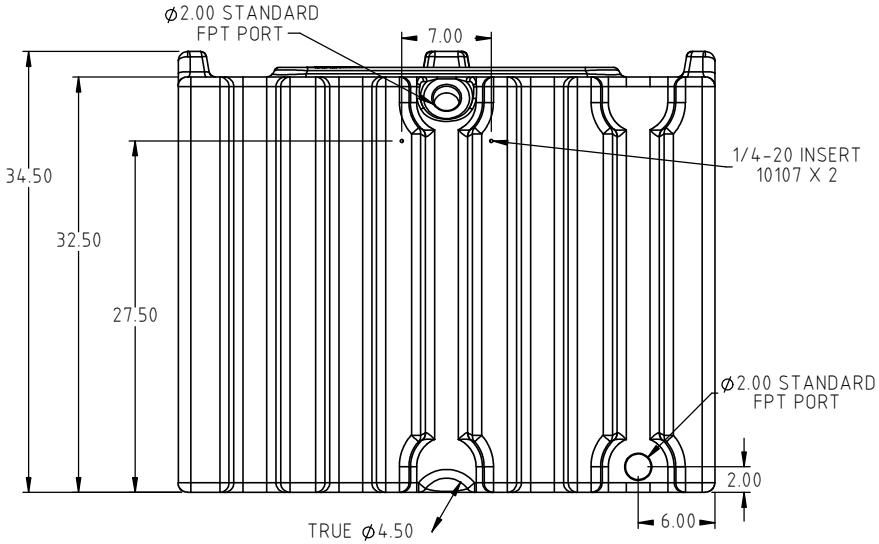

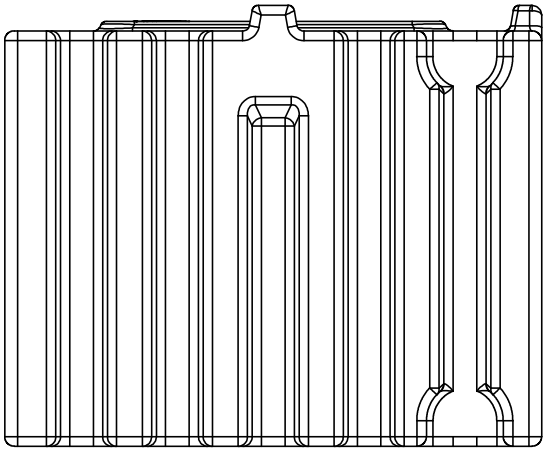

REV	DESCRIPTION	BY / DATE	CCN

DRAWN / DATE: ADH 7/12/11

APPRD. / DATE: REH 7/13/11

MATERIAL: 10420

ALL DIMENSIONS ARE IN DECIMAL INCHES
TOLERANCES UNLESS OTHERWISE SPECIFIED

POLYETHYLENE	METAL
±1% @ 68° F	DECIMAL ± .125" FRACTION ± 1/4" ANGLE ± 1°

THIRD ANGLE PROJECTION
ANSI 14.5M

SHOT WEIGHT: 124 LBS.

SHIPPING WEIGHT: 126 LBS.

FINISH:

NOTES:

1.) NOM. WALL THICKNESS 0.325

Den Hartog INDUSTRIES, INC.

Ace Roto-Mold Injection Molding Blow Molding Sowjoy

4010 HOSPERS DRIVE S. BOX 425, HOSPERS, IOWA 51238-0425

DESCRIPTION: 180 GALLON TOTE

SCALE: N.S.

PART NO.: ST0180-42