© DEN HARTOG INDUSTRIES, INC.

Copyright. All information furnished within this document, electronic file or design correspondence is the property of Den Hartog industries, Inc. and shall not be used, disclosed to others or copied without the expressed written consent of Den Hartog Industries, Inc.

CB1550-90+90-30ST

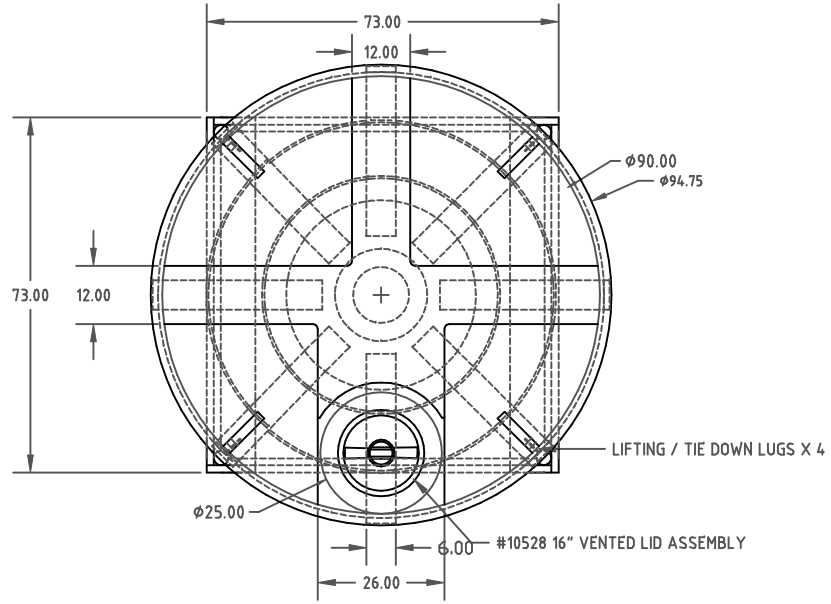

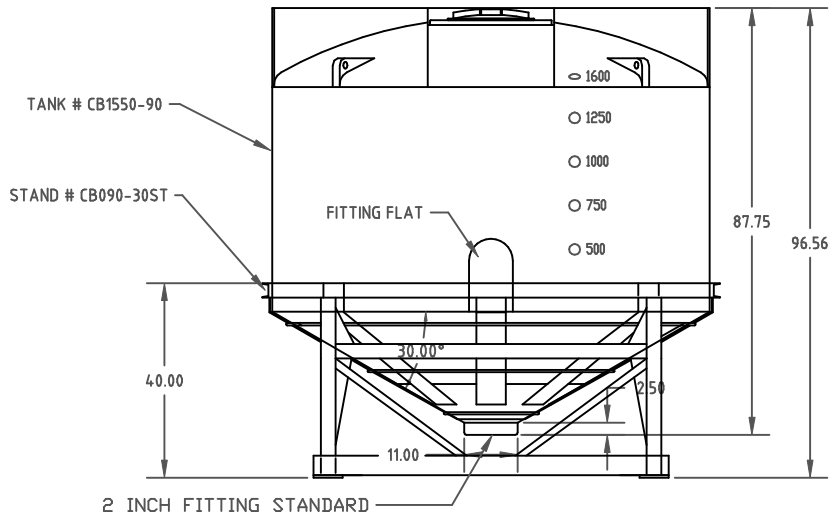

REV	DESCRIPTION	BY / DATE	CCN

ALL DIMENSIONS ARE IN DECIMAL INCHES
TOLERANCES UNLESS OTHERWISE SPECIFIED

POLYETHYLENE	METAL
±1% @ 68° F	DECIMAL ± .125" FRACTION ± 1/4" ANGLE ± 1°

THIRD ANGLE PROJECTION
ANSI 14.5M

DRAWN / DATE: DHJ 1/3/11

APPRD. / DATE: REH 1/3/11

SHOT WEIGHT:

SHIPPING WEIGHT: 926 LBS.

FINISH:

MATERIAL: TANK 10420 3 MELT
STAND MILD STEEL

NOTES:
1. THICKNESS @ BOTTOM SIDEWALL .326

Den Hartog
INDUSTRIES, INC.
Ace Roto-Mold Injection Molding Blow Molding Sowjoy
4010 HOSPERS DRIVE S. BOX 425, HOSPERS, IOWA 51238-0425

DESCRIPTION: 1550 GALLON 90" DIA. X 30° CONE BOTTOM TANK W/ INDUSTRIAL TOP AND STAND

SCALE: N.S.

PART NO.: CB1550-90+90-30ST