10897

E

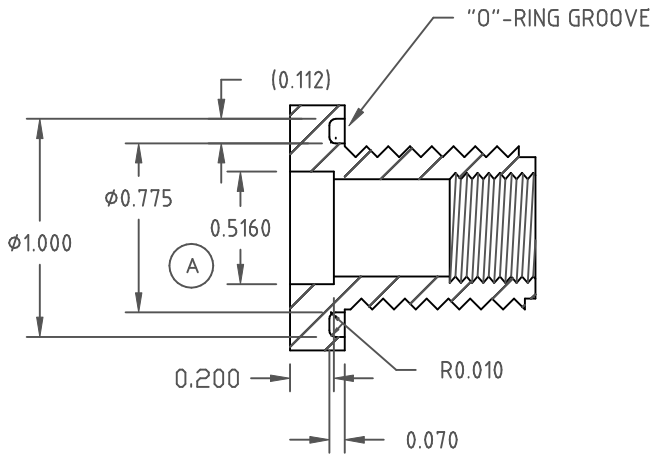

SECTION A-A

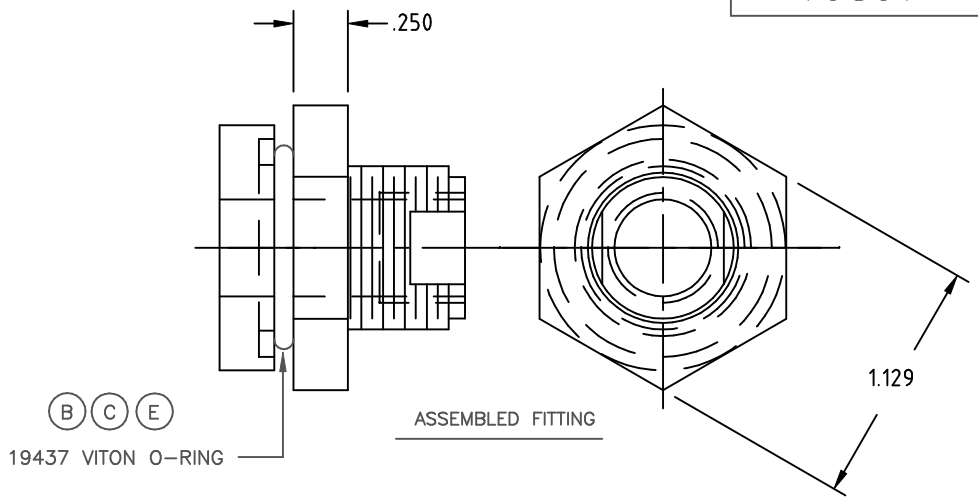

ASSEMBLED FITTING

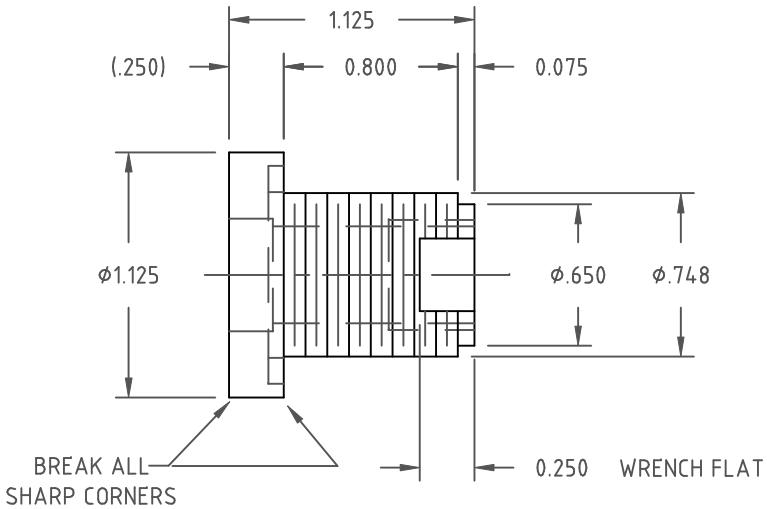

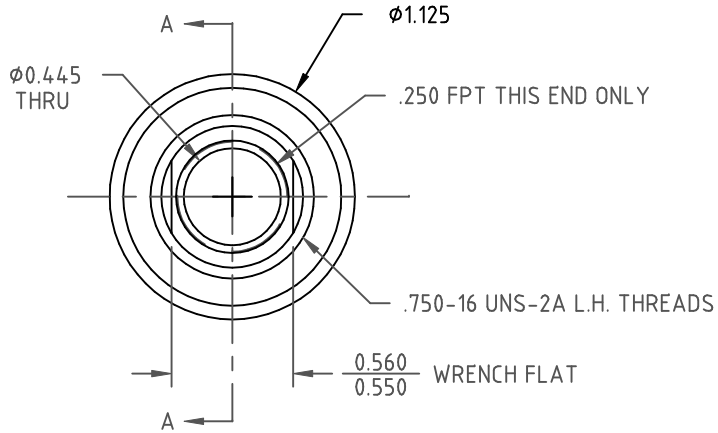

REV	DESCRIPTION	DATE	APPRD
E	O-RING ADDED CCN 1755	11/19/08	REH
D	TOLERANCE WAS .5% @ 68° F	4/2/07	GWC
C	O-RING REMOVED	10/13/06	
B	O-RING CHANGED TO VITON	5/15/06	
A	COUNTERBORE ADDED	7/14/05	

ALL DIMENSIONS ARE IN DECIMAL INCHES
TOLERANCES UNLESS OTHERWISE SPECIFIED
DECIMAL +/- .010"
FRACTION +/- 1/32"
ANGLE +/- 1°

DRAWN / DATE
REH/5/15/06

APPRD. / DATE
REH/5/15/06

THIRD ANGLE PROJECTION
ANSI 14.5M

MATERIAL
ALT. 1: NAVAL BRASS ROD
ALT. 2: 6061-T6 ALUMINUM RDS.

TOL. EXCEPT AS NOTED
+/- .004 MACH. DIA`S.
+/- .010 LINEAR

Ace Roto Mold
A DIVISION OF DEN HARTOG INDUSTRIES, INC.
4018 HWY. 60 BLVD., HOSPERS, IOWA

CLIENT / DESCRIPTION
1/4" NPT BULKHEAD FITTING

SCALE
N.S.

PART NO.
10897