© DEN HARTOG INDUSTRIES, INC.

Copyright. All information furnished within this document, electronic file or design correspondence is the property of Den Hartog industries, Inc. and shall not be used, disclosed to others or copied without the expressed written consent of Den Hartog Industries, Inc.

CB3000-96

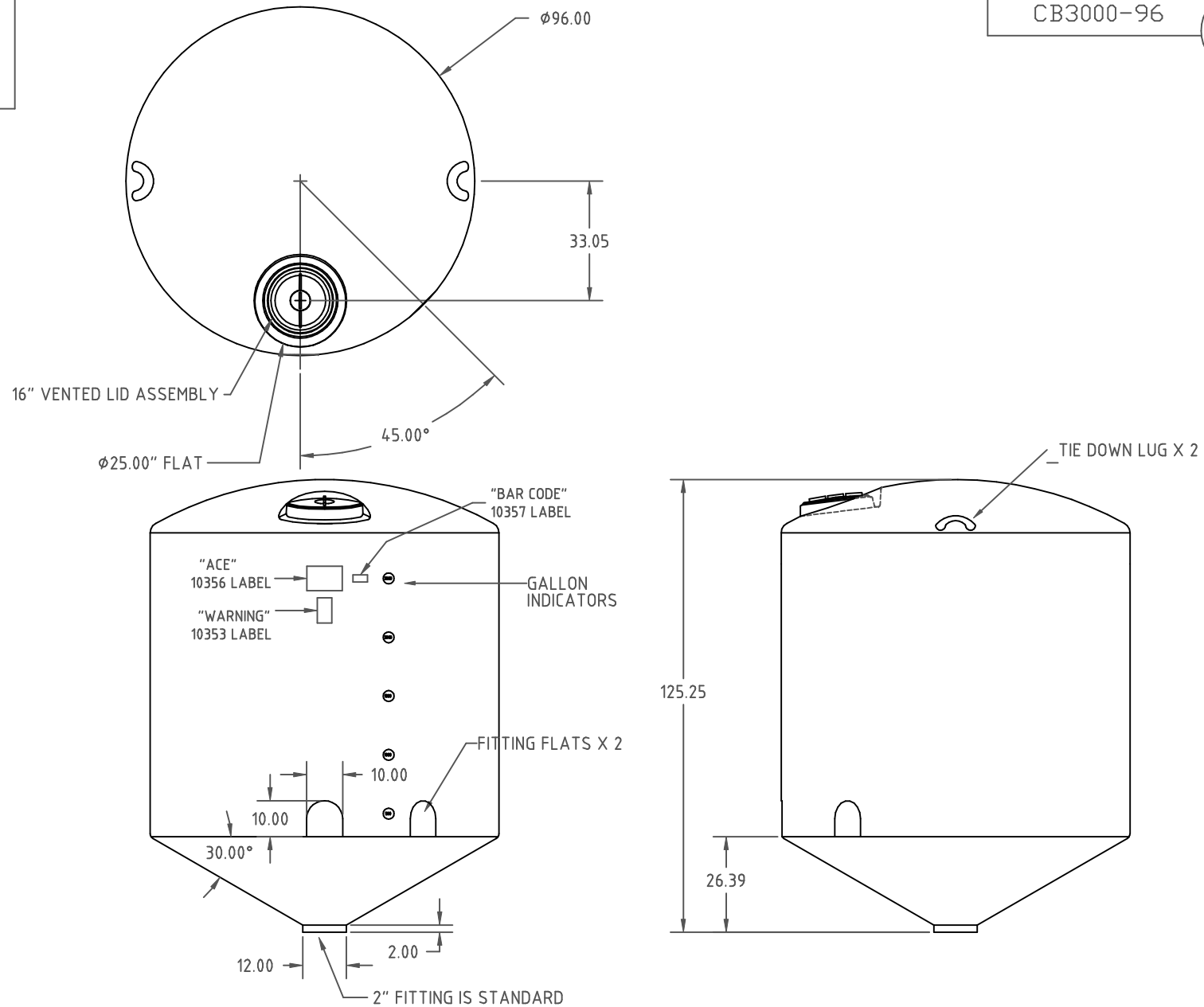

REV	DESCRIPTION	BY / DATE	CCN

ALL DIMENSIONS ARE IN DECIMAL INCHES
TOLERANCES UNLESS OTHERWISE SPECIFIED

POLYETHYLENE	METAL
±1% @ 68° F	DECIMAL ± .125" FRACTION ± 1/4" ANGLE ± 1°

THIRD ANGLE PROJECTION
ANSI 14.5M

DRAWN / DATE: DHJ 8/13/09

APPRD. / DATE: REH 10/10/09

SHOT WEIGHT: 550

SHIPPING WEIGHT: 552

FINISH:

MATERIAL

MDPE OR EQUIVALENT REFERENCE MATERIAL DATA SHEET FOR SPECIFIC PROPERTIES.

NOTES:

1. .42 WALL AT SIDE SUMP

Den Hartog
INDUSTRIES, INC.

Ace Roto-Mold Injection Molding Blow Molding Sowjoy

4010 HOSPERS DRIVE S. BOX 425, HOSPERS, IOWA 51238-0425

DESCRIPTION: 3000 GALLON 30° CONE BOTTOM TANK

SCALE: N.S.

PART NO.: CB3000-96